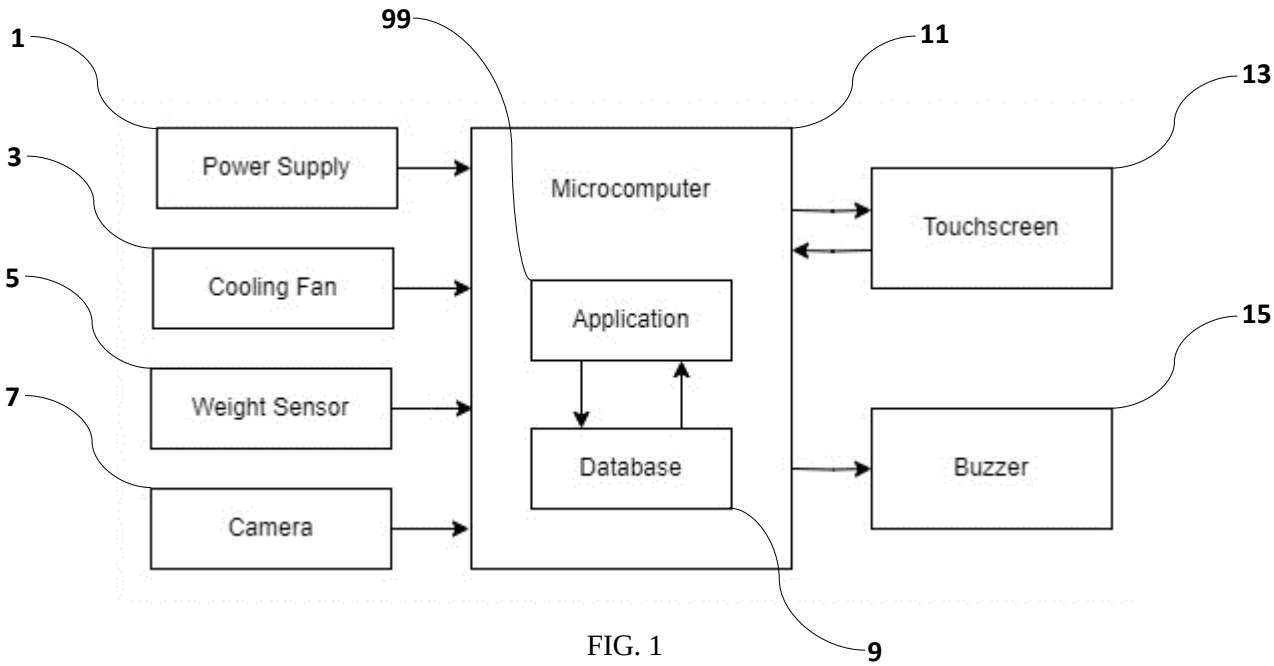

FIG. 1

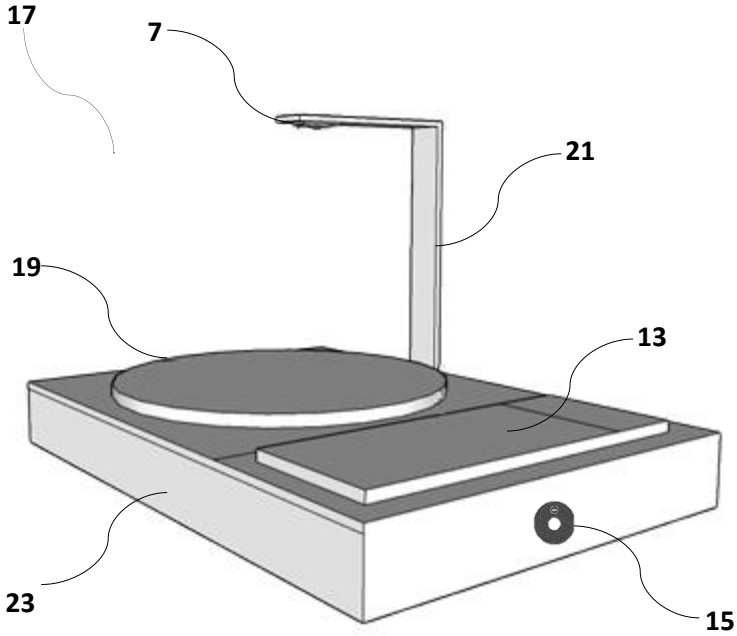

FIG. 2

University of Science and Technology of Southern Philippines
Applicant
By:
Gladdy Christie H. Compasan
ITSO Manager - USTP

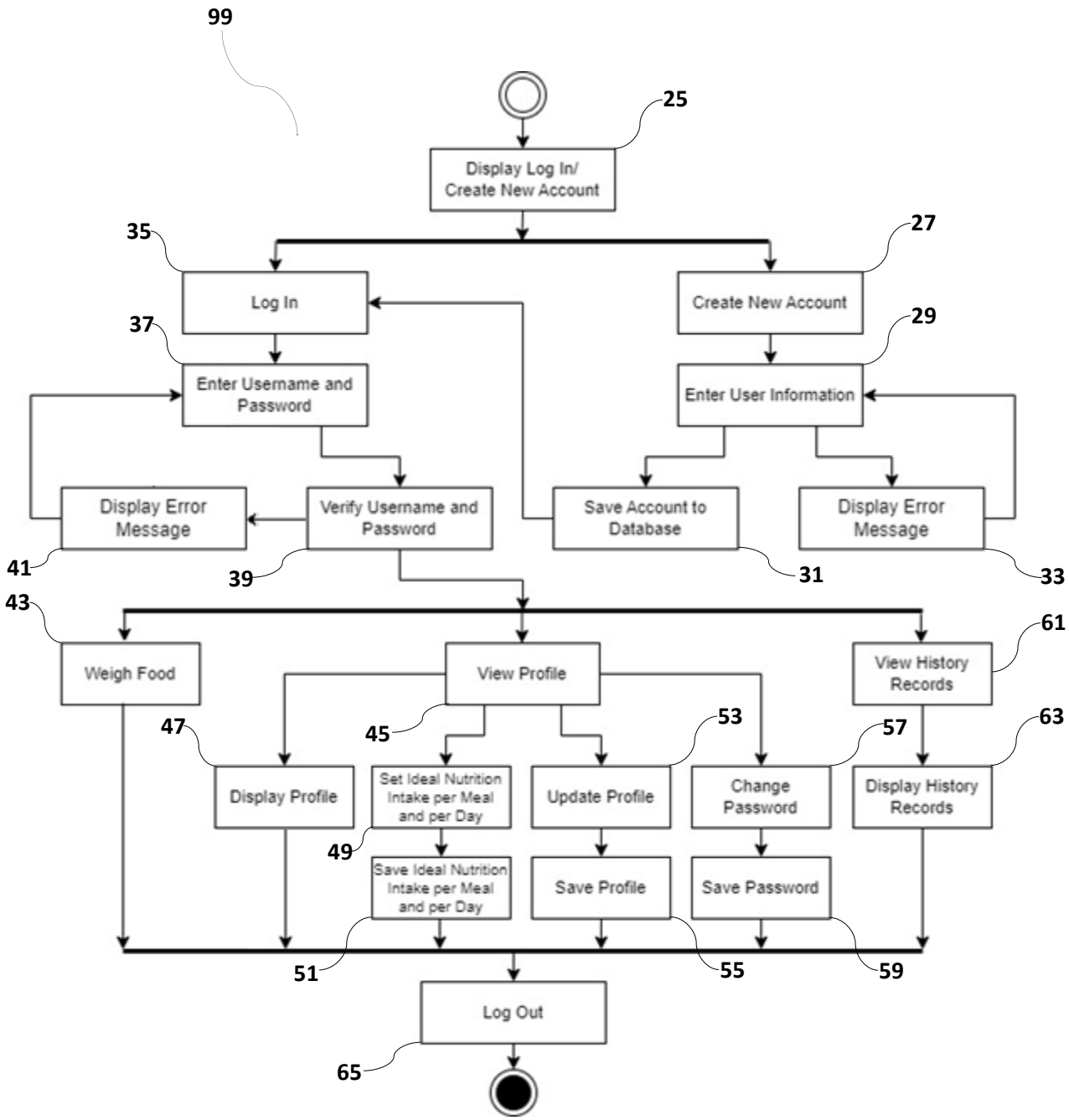

FIG. 3

University of Science and Technology of Southern Philippines
Applicant
By:
Gladdy Christie H. Compasan
ITSO Manager - USTP

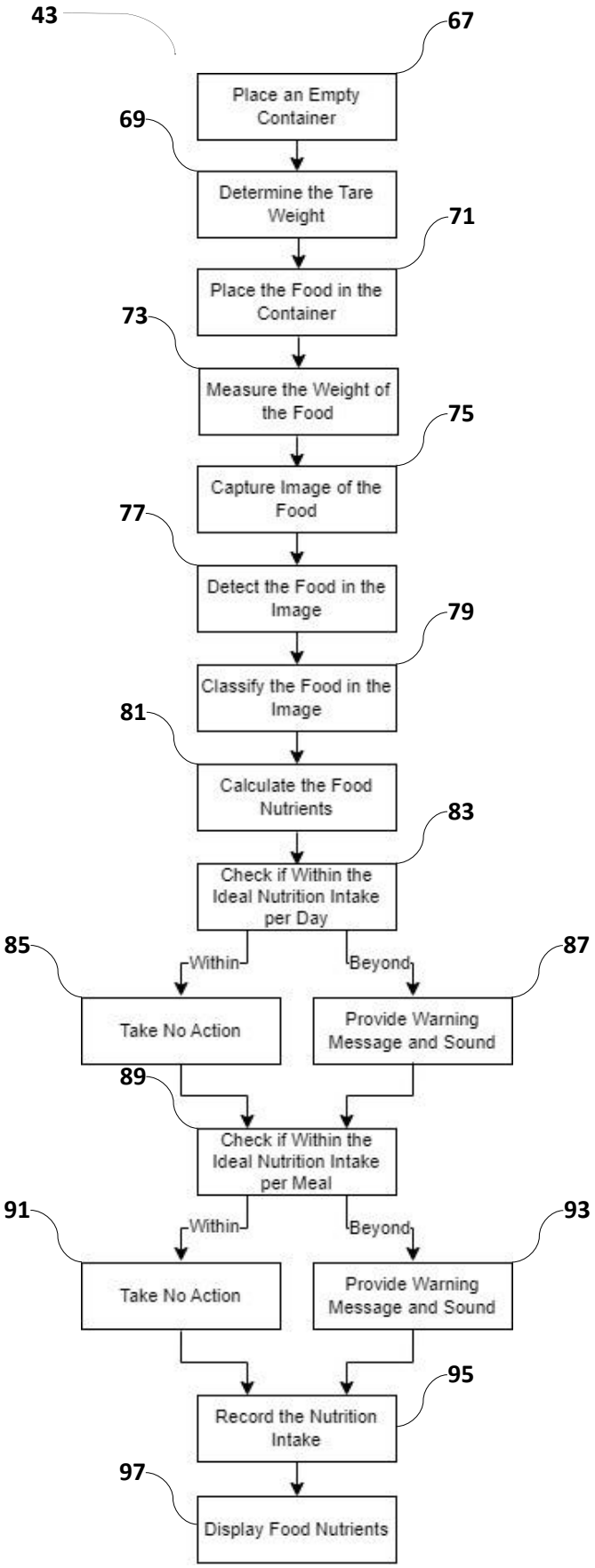

FIG. 4

University of Science and Technology of Southern Philippines
Applicant
By:

Gladdy Christie H. Compasan
ITSO Manager - USTP